Eye-Opening Light Technology

Energy 2003, Orlando Florida

August 9, 2003 10:30 – 12:00

© Brian Liebel, 2003

New Design Approach Using Scotopically Enhanced Lighting

Brian Liebel, PE, LC

AfterImage + space

© Brian Liebel, 2003

What is Light?

Light is simply that “thing” that allows us to See…

It is composed of spectral wavelengths, perceived as color:

Light is Color, Color is Light

© Brian Liebel, 2003

Eyes receive light and provide us with the ability to see.

We call this vision.

Therefore, we must understand the relationship between light and eyes to understand vision.

© Brian Liebel, 2003

The Visible Spectrum

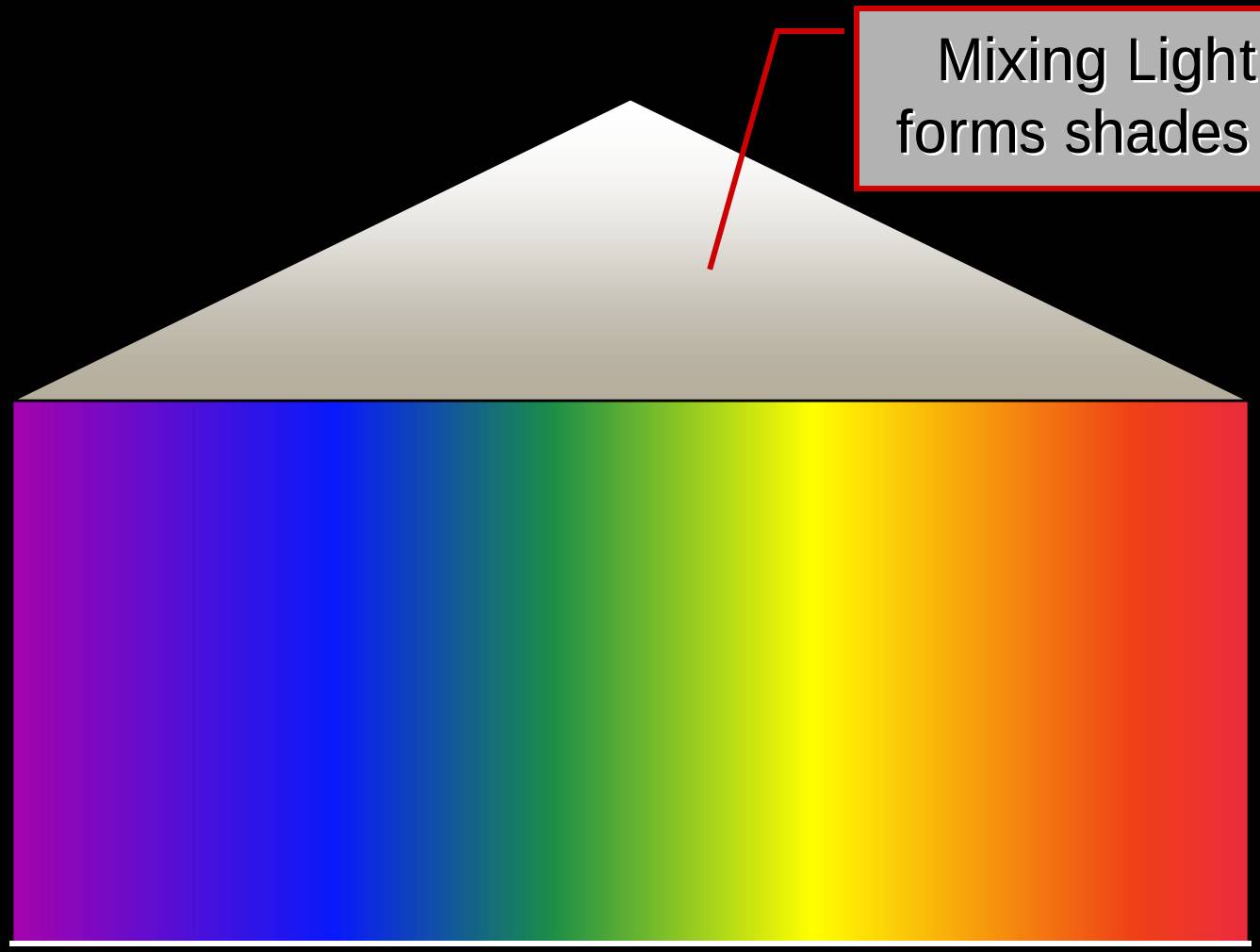

© Brian Liebel, 2003

Spectral Composition of Light

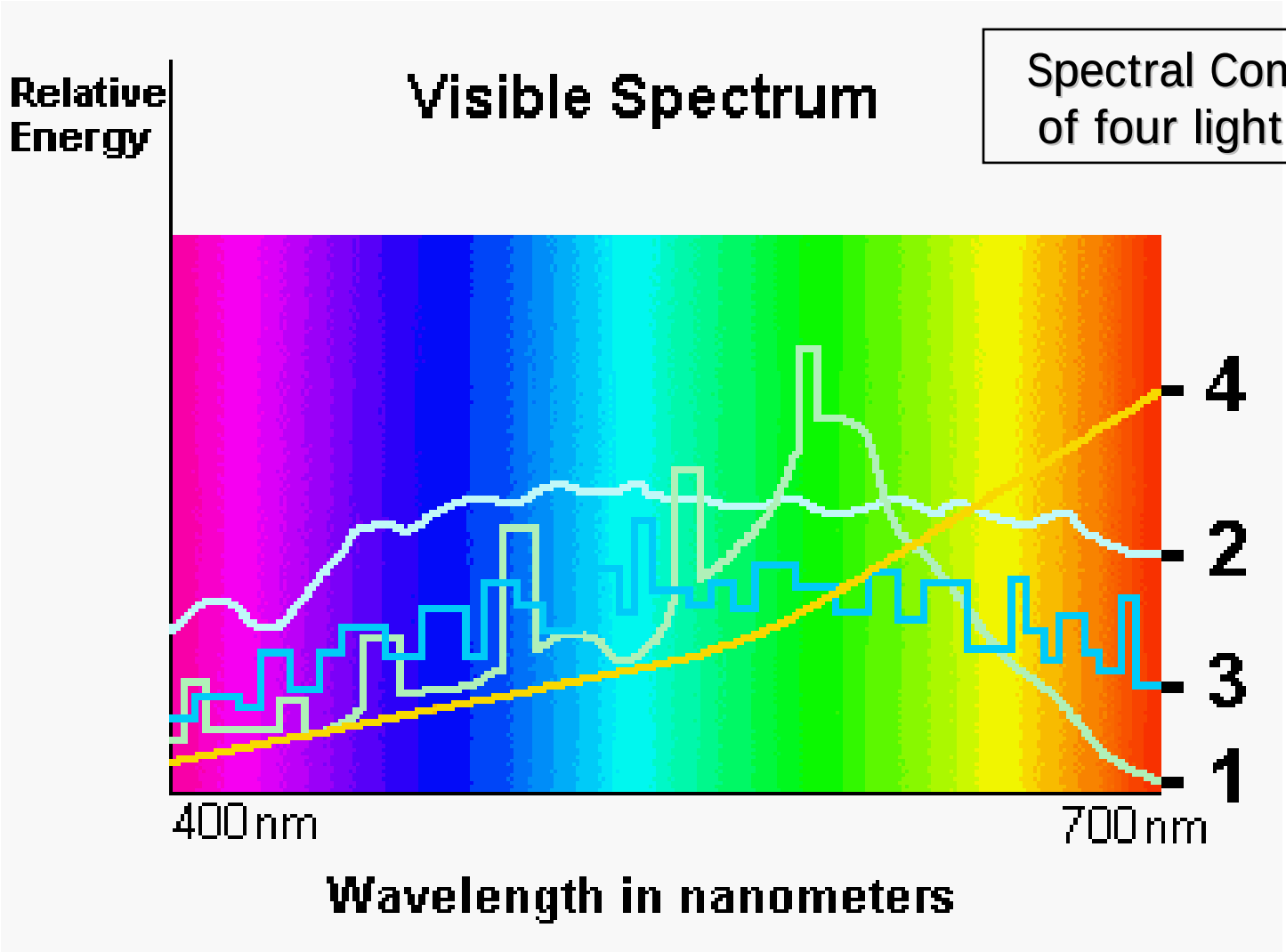

© Brian Liebel, 2003

Eye and Color Reception

<u>Retina</u>: Layer within globe containing Rods and Cones

<u>Fovea</u>: Central point of vision - Cones Only

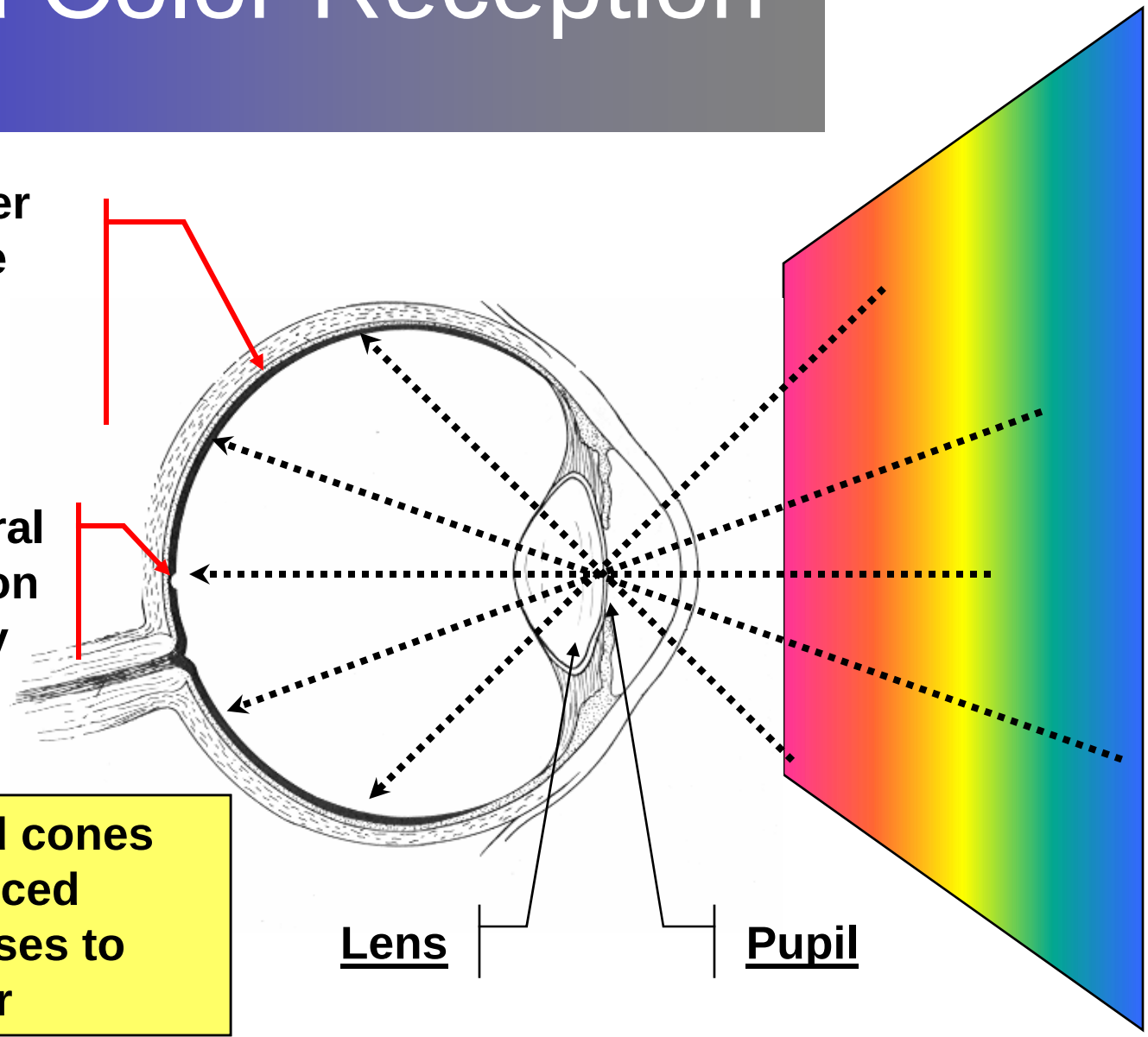

<u>Both</u> rods and cones have pronounced visual responses to light and color

© Brian Liebel, 2003

Rod and Cone Distribution

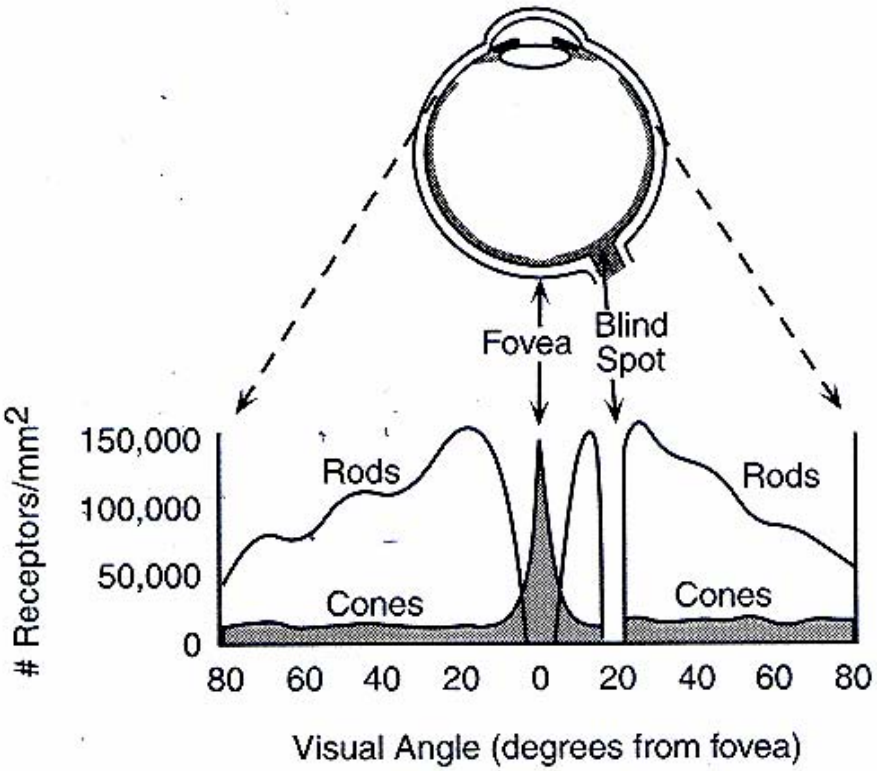

Notes:

1. **No Rods in the Fovea**
2. **Cones are less sensitive and do not respond to light below .034 cd/m^2**
3. **Rods outnumber cones 10 to 1 outside of Fovea**
4. **Rods and Cones differ in the way they respond to the light spectrum**

© Brian Liebel, 2003

Isolating Cones

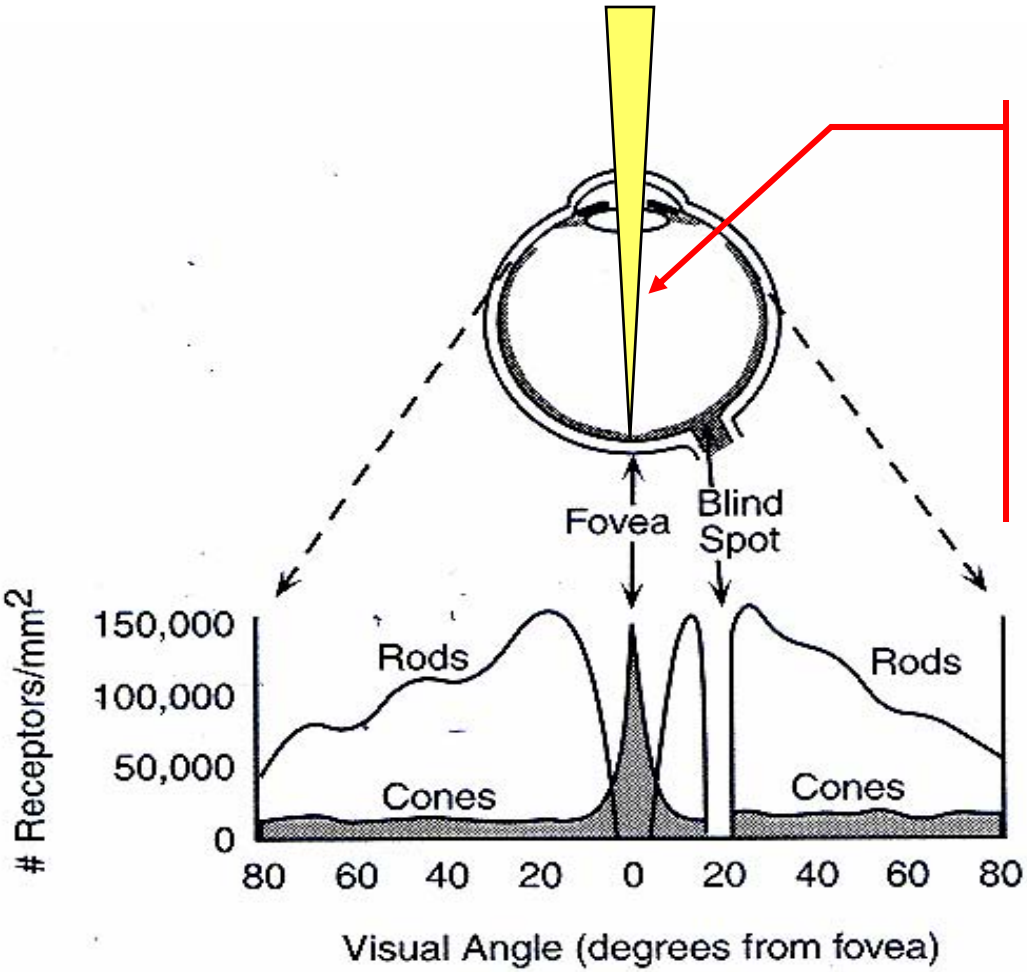

1. **No Rods in the Fovea**
2. **Must restrict the field of view to the central 2° - where there are no rods**

© Brian Liebel, 2003

Photopic Spectral Luminous Efficiency Function

- Photopic Function = Cone Response
  - The application of this function to vision is limited to very constricted fields of view

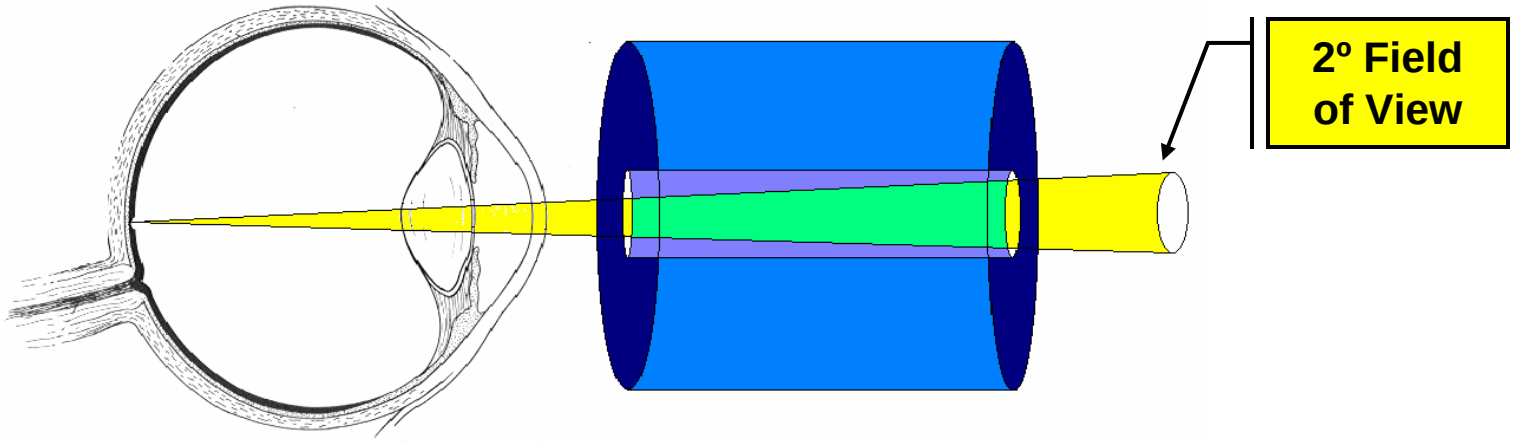

© Brian Liebel, 2003

Isolating Rods

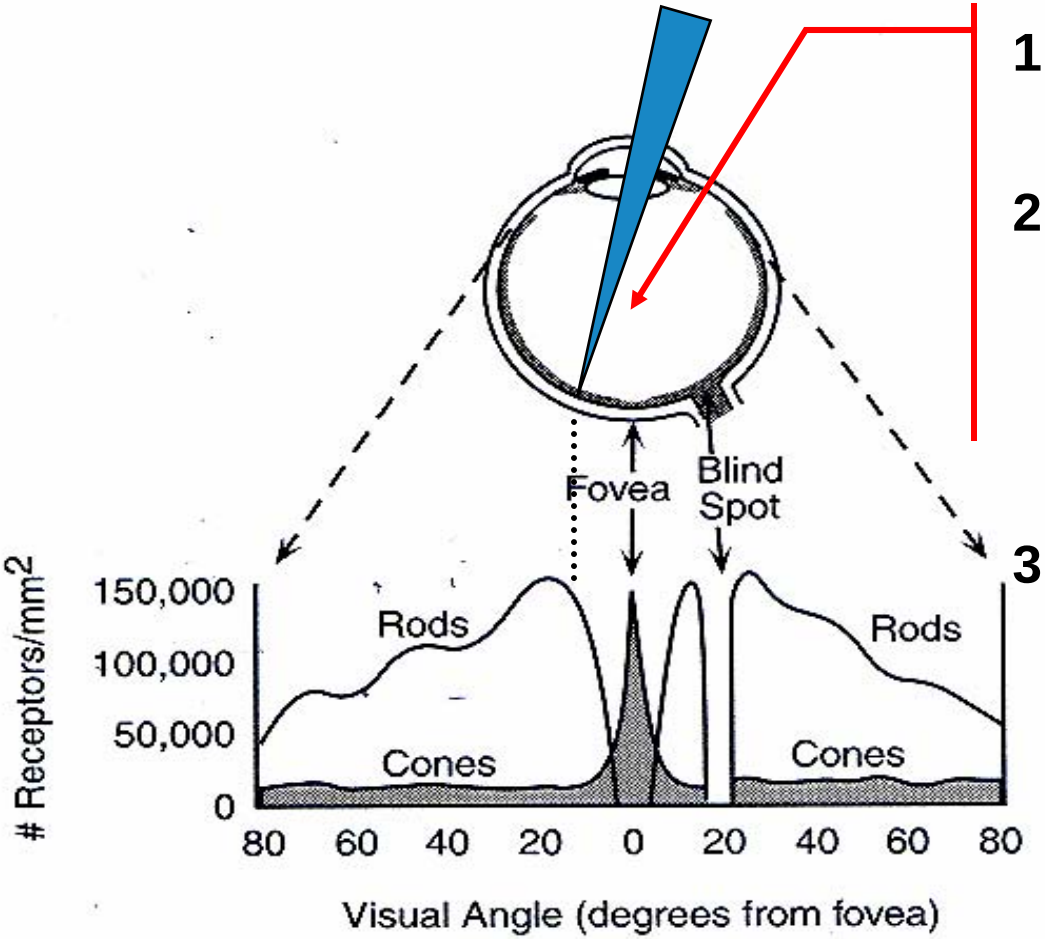

1. **No Rods in the Fovea**
2. **Cones are less sensitive and do not respond to light below .034 cd/m^2**
3. **Therefore, must test off-axis, at light levels below cone threshold**

© Brian Liebel, 2003

Scotopic Spectral Luminous Efficiency Function

- Scotopic Function = Rod Response
  - Rod response determination required dark levels – that does **NOT** mean that rods do not function above these levels

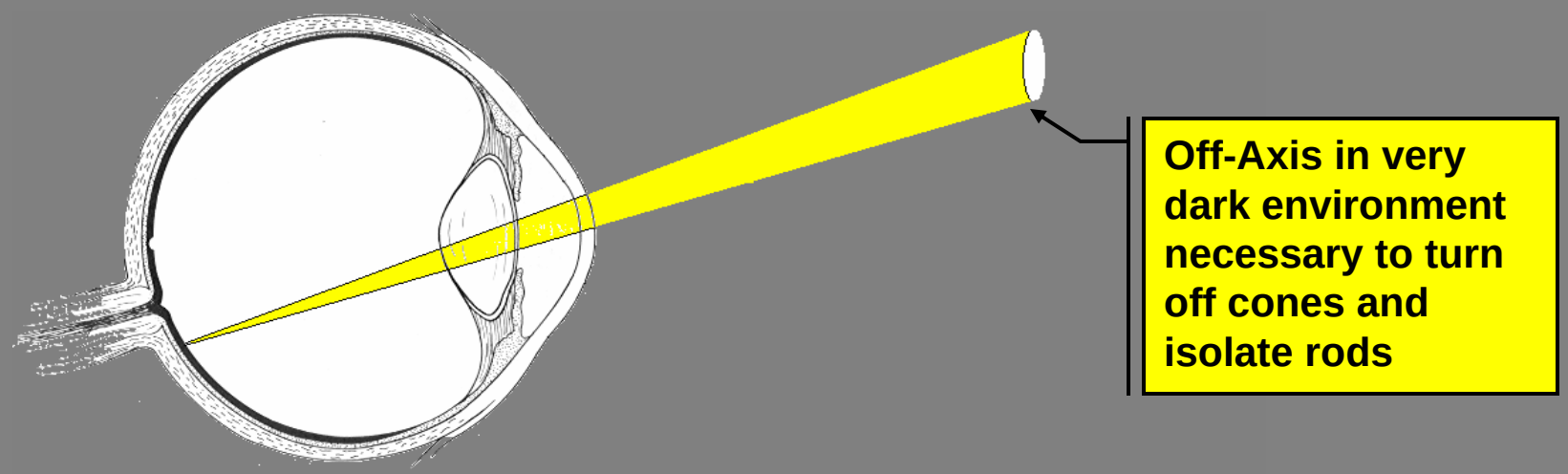

© Brian Liebel, 2003

Spectral Luminous Efficiency Function

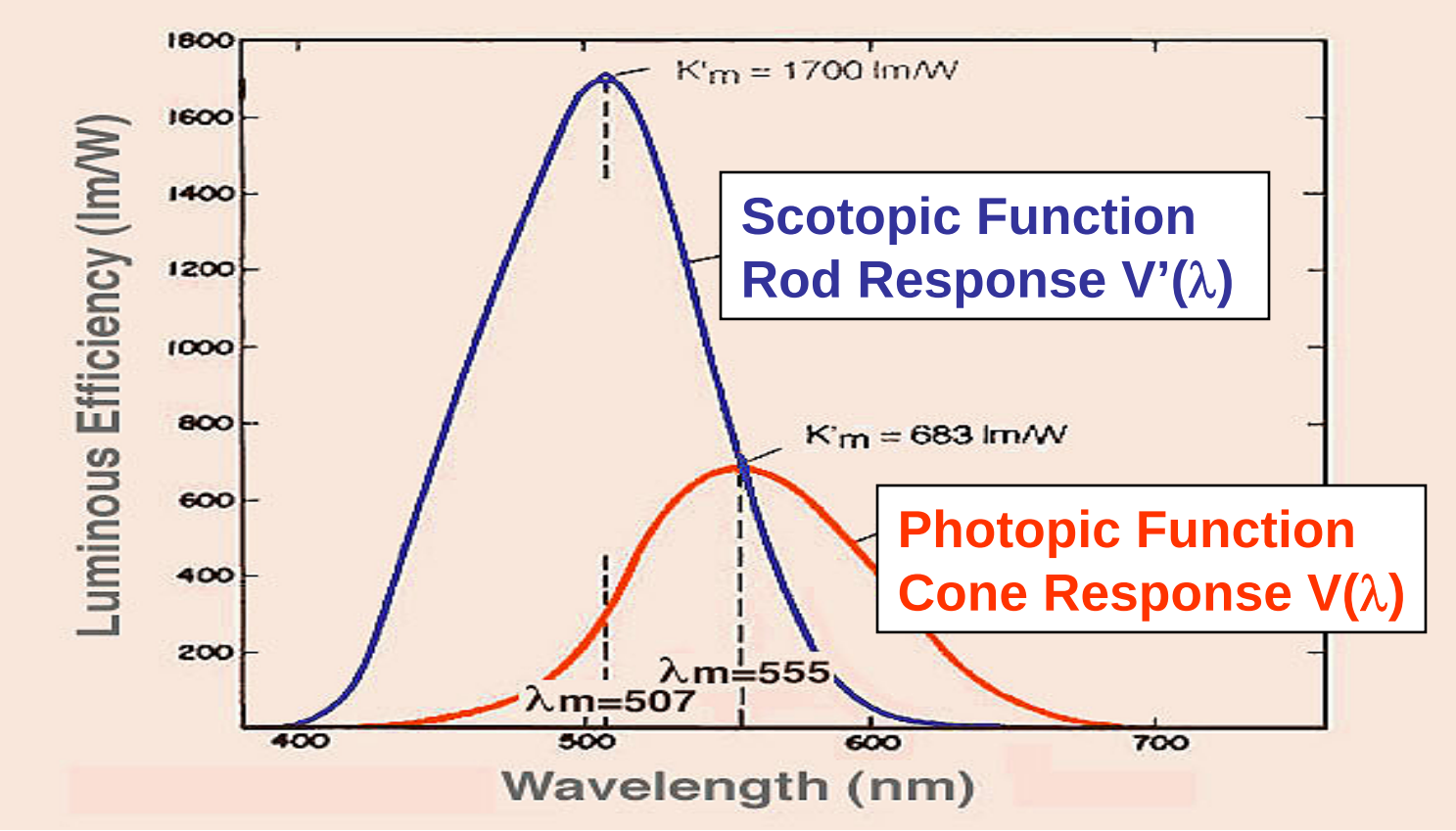

These are completely independent of light level.

© Brian Liebel, 2003

Spectral Luminous Efficiency Functions

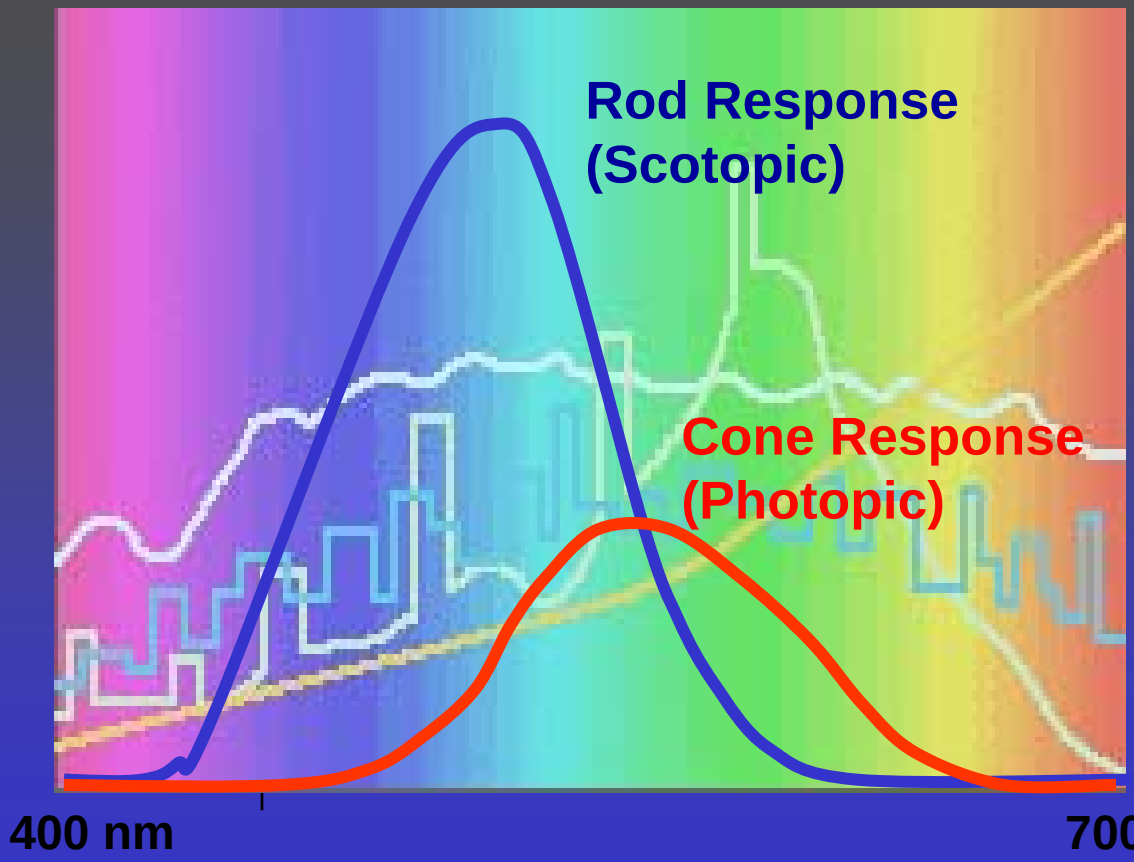

The light source impact on Rods is defined by the Scotopic Function – peaks in blue region

The light source impact on Cones is defined by the Photopic Function – peaks in green region

ALL light measurements are based on the Photopic function ONLY.

© Brian Liebel, 2003

The Scotopic Benefit

DOE Research has demonstrated that:

- Light sources with more scotopic color content result in smaller pupils
- Smaller pupils = better visual acuity and higher levels of brightness perception
- These are important considerations in many working environments, especially with VDTs

© Brian Liebel, 2003

Aberrant Rays

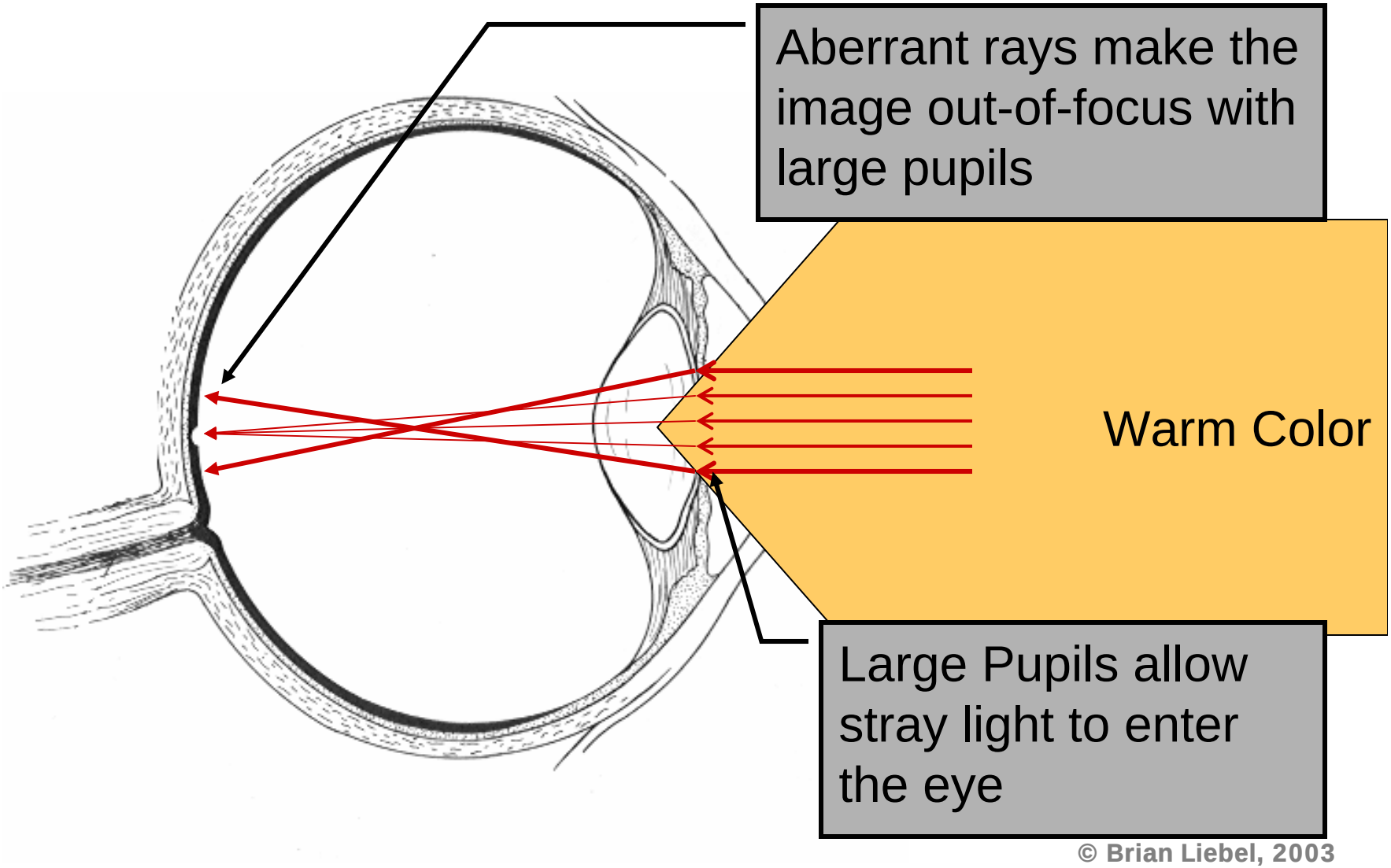

© Brian Liebel, 2003

Aberrant Rays

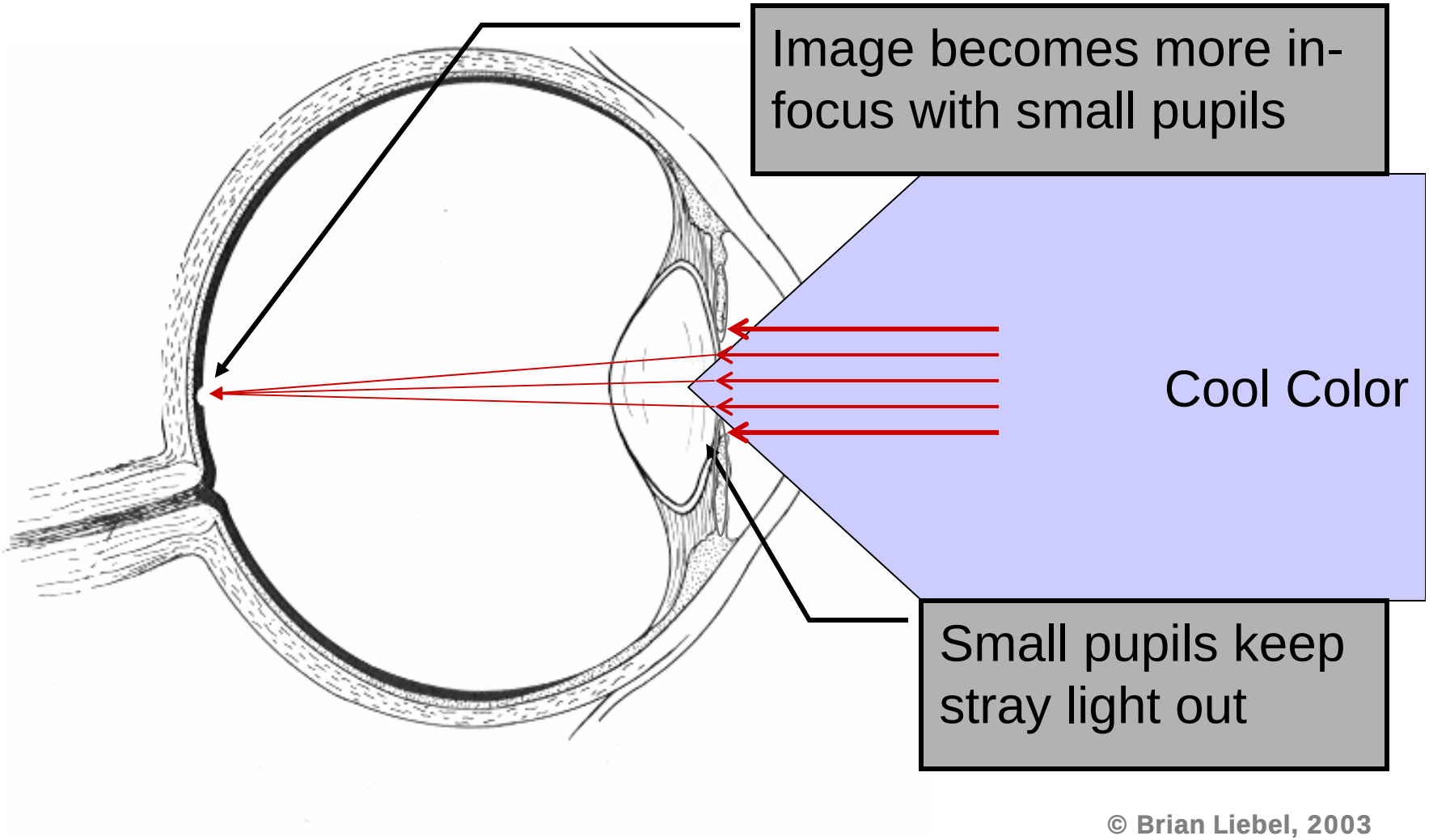

© Brian Liebel, 2003

Real World Environment

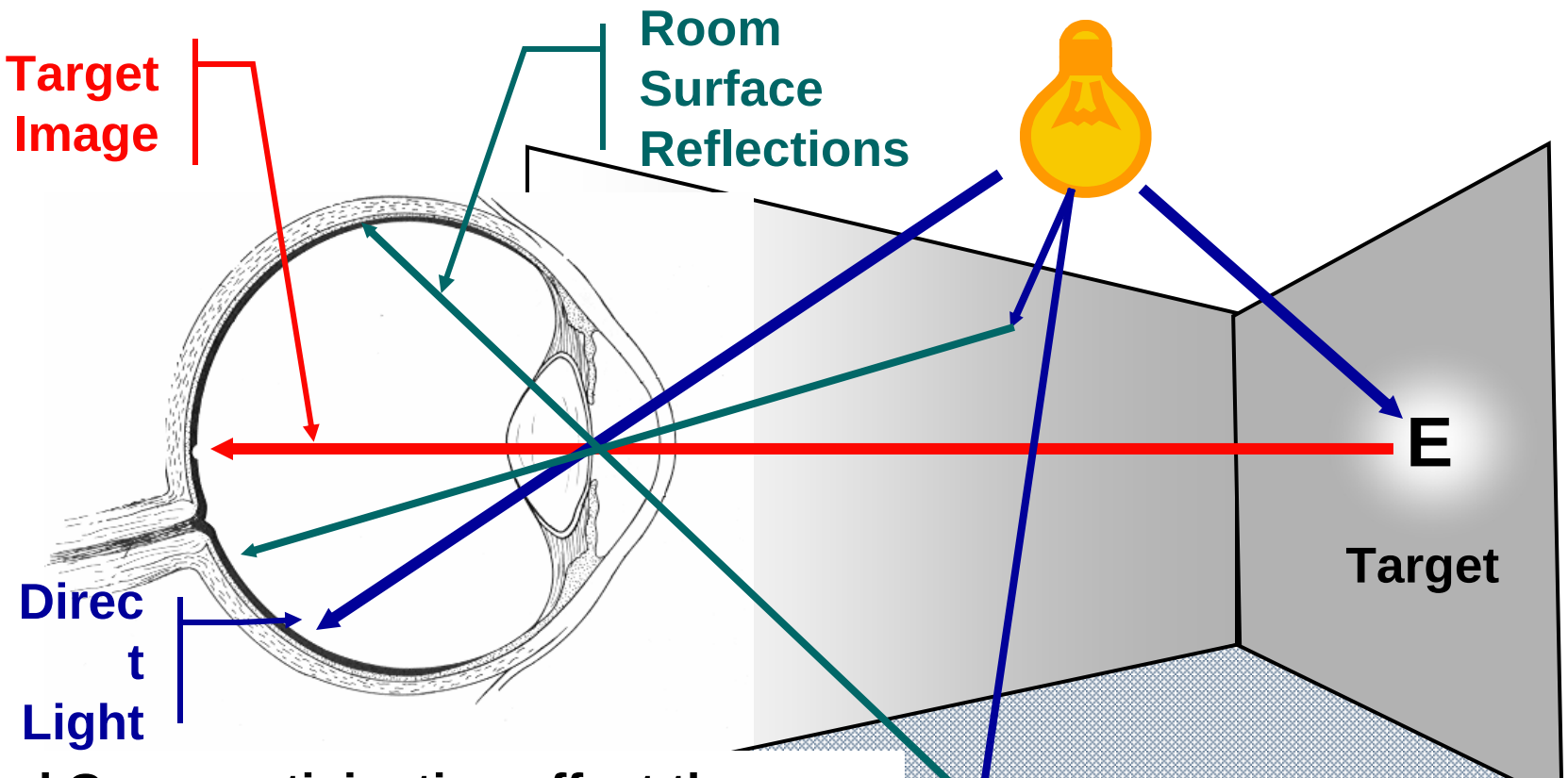

Rod and Cone participation affect the visual system differently for visual acuity, brightness perception, reaction time, etc.

© Brian Liebel, 2003

What is *Scotopically Enhanced* Lighting???

- Lighting is Scotopically Enhanced if it contains more blue in its spectrum.
- The added blue content activates a visual response that heightens the sensation of brightness and adds to visual clarity.
- Scotopically Enhanced lighting is more like daylight than traditional lighting.

© Brian Liebel, 2003

Why is Scotopically Enhanced Lighting *Visually Effective*?

- The color of the lighting produces the sensation of brighter space and better visual clarity.
- By dimming the lights, we can achieve the same visual perception and visual performance as other lighting, using less energy.

© Brian Liebel, 2003

Where Does this Apply?

- Scotopically Enhanced Lighting is best suited to applications where visual acuity, visual comfort, and brightness perception are important considerations.
- It may not be appropriate for other applications, such as a relaxing evening out to dinner….

© Brian Liebel, 2003

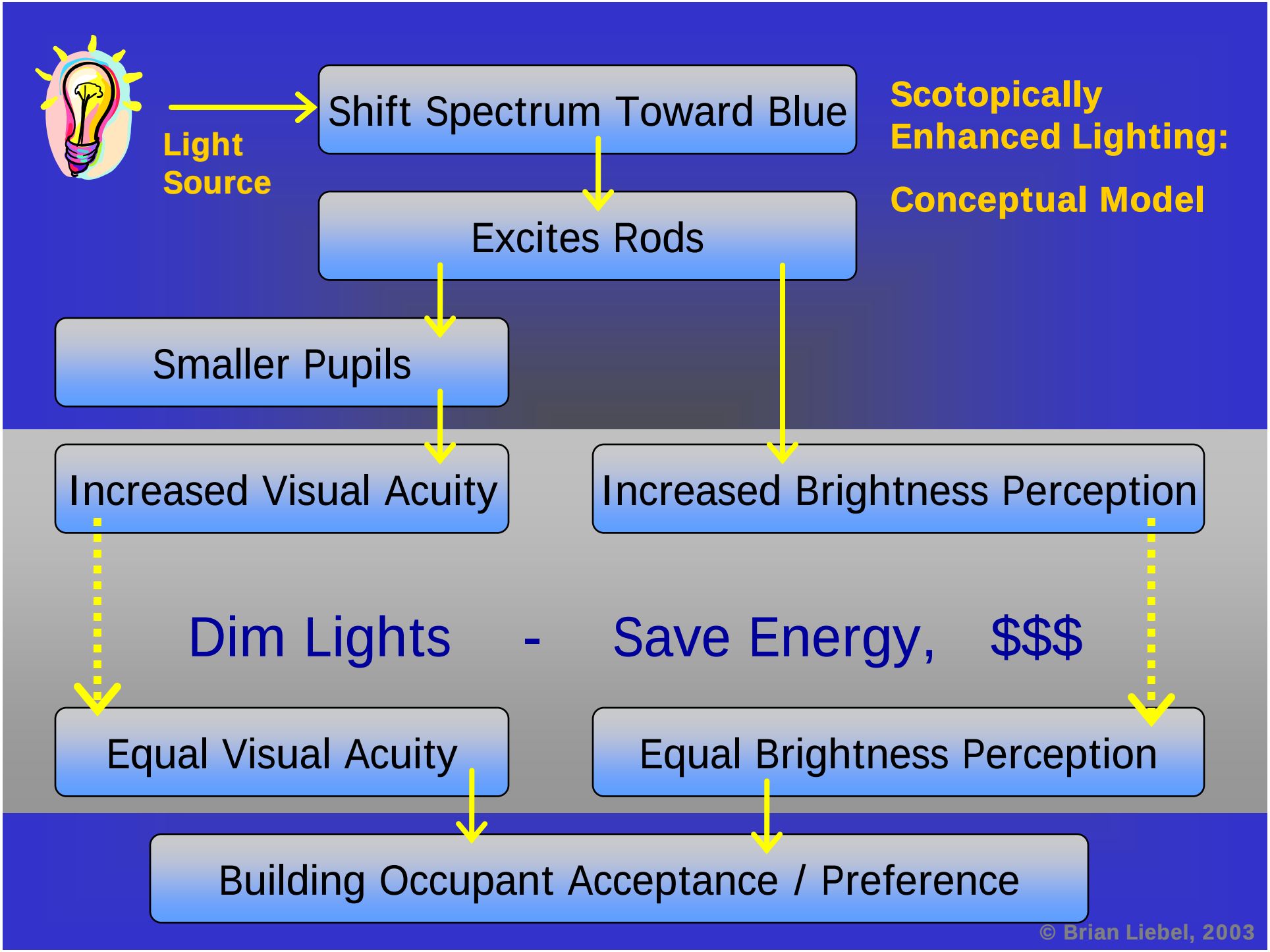
Light Source
Shift Spectrum Toward Blue
Scotopically Enhanced Lighting:
Conceptual Model
Excites Rods
Smaller Pupils
Increased Visual Acuity
Increased Brightness Perception
Dim Lights - Save Energy, $$$
Equal Visual Acuity
Equal Brightness Perception
Building Occupant Acceptance / Preference
© Brian Liebel, 2003

The Conservation of Energy: VISUAL EFFICIENCY

Increased Visual Acuity **+** Increased Brightness Perception **=** Increased Visual Efficiency

Scotopically Enhanced Lighting is more

ENERGY EFFICIENT

because it is more

VISUALLY EFFICIENT

© Brian Liebel, 2003

Lighting Efficiency

System Efficacy = Lumens / Watt

- **Lumens** = Measure of Light Output
- **Watts** = Lamp + Ballast Watts

© Brian Liebel, 2003

Defining the Lumen

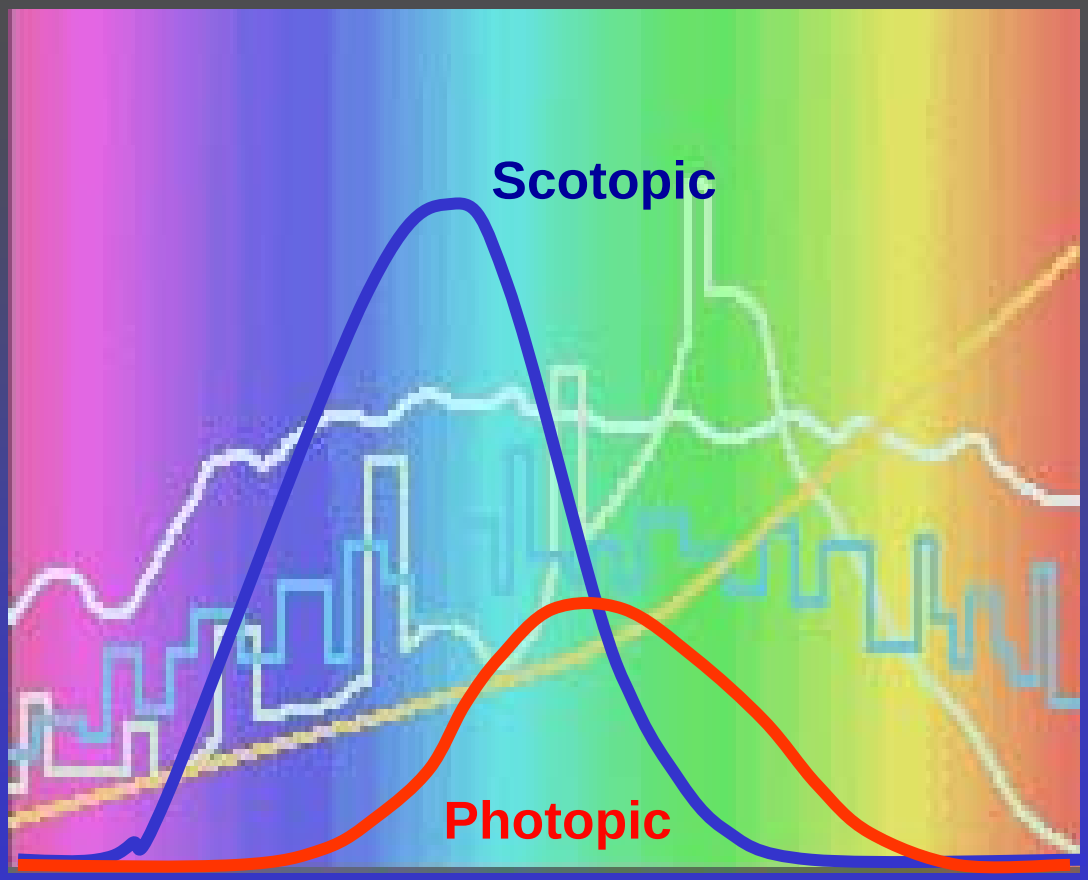

400 nm

700 nm

Light sources weighted by the scotopic functions yields scotopic lumens

Light sources weighted by the photopic function yields photopic lumens; These are the values in lighting catalogs.

© Brian Liebel, 2003

Mathematical Model - Lumens

- The Scotopic function can be used as a weighting function to define Scotopic Lumens.

S= Scotopic Lumens

- The Photopic function is used as a weighting function to define Lumens, based on the SI definition of light.

P = Photopic Lumens

© Brian Liebel, 2003

Mathematical Model - S/P Ratio

- The S/P ratio defines the ratio of the scotopic lumens to the photopic lumens

$$S/P = \frac{\text{Scotopic Lumens}}{\text{Photopic Lumens}}$$

NOTE: By using the S/P ratio, we do not need to have Scotopic Lumens as published values: S = P (S/P)

© Brian Liebel, 2003

S/P Ratio of Various Lamps

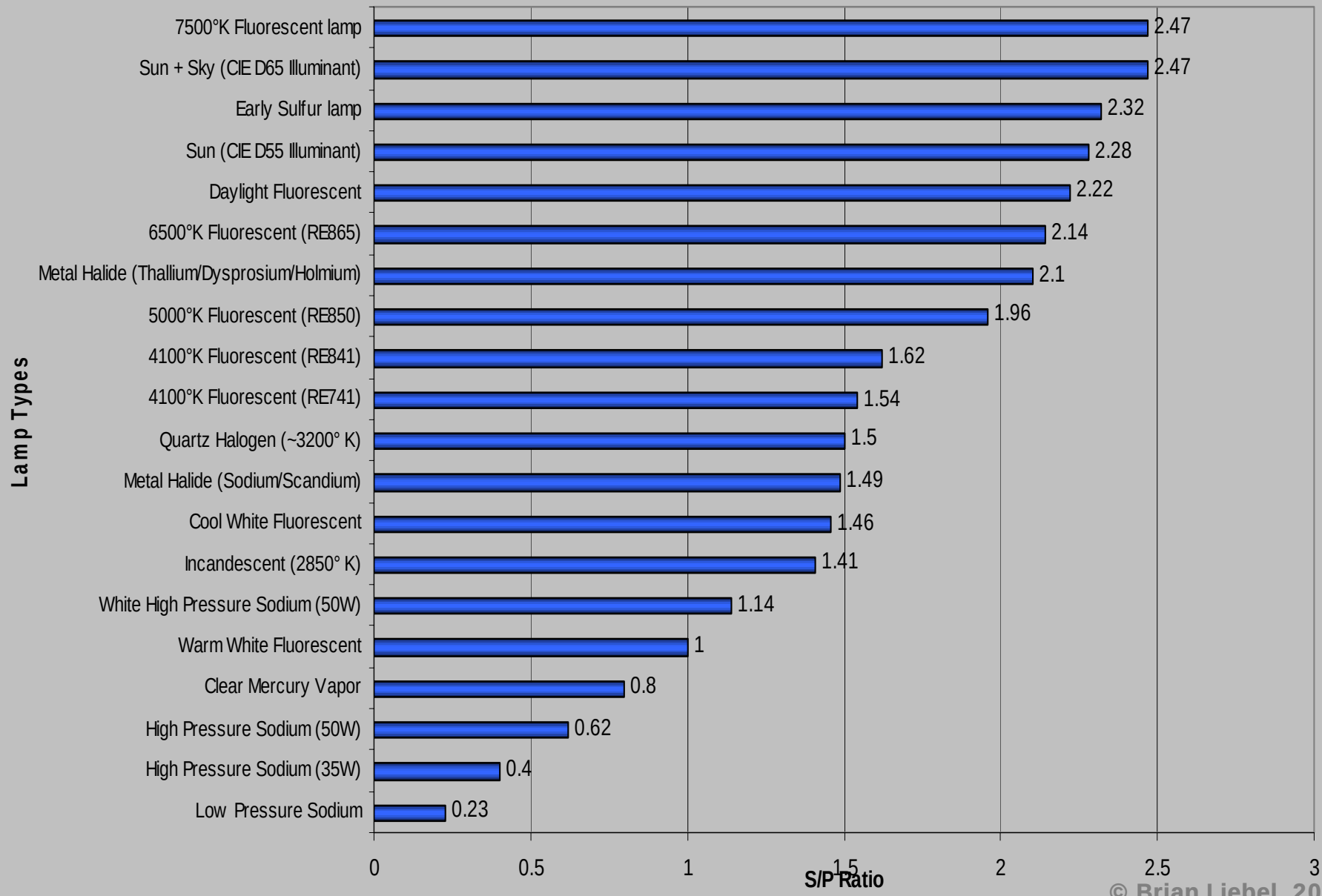

© Brian Liebel, 2003

Lighting Color Terminology

- Color Temperature: “warm” or “cool”
- CRI: Higher value = better color rendering
  - Fluorescents:
    - 75-78 CRI standard
    - 85-86 CRI is available, with higher light output
    - 95 CRI is available, but much less efficient
  - **735:** *A lamp with 3500 K Color Temperature and 75 CRI – This is the most commonly used lamp in office buildings.*
  - **850:** *A lamp with 5000 K Color Temperature and 85 CRI – This is the lamps being used in most Enhanced Lighting applications*

© Brian Liebel, 2003

Mathematical Model – S/P Method

There currently are quantitative predictors for 3 tasks:

Std. Lumens	Ratio	Brightness Perception	Reading Paper	Computer Tasks
P	(S/P)	$P \times (S/P)^{0.5}$	$P \times (S/P)^{0.78}$	$P \times (S/P)^{1.0}$

This method is not yet recognized by IESNA

© Brian Liebel, 2003

Energy Ramifications

Compare 735/835 to 850:

(4' T8 fluorescent lamps)

Lamp	Initial Lumens (P)	S/P Ratio	Brightness $P(S/P)^{0.5}$	Paper $P(S/P)^{0.78}$	Computer $P(S/P)^{1.0}$
735	2850	1.30	3250	3497	3705
835	3100	1.45	3681	4053	4371
850	3000	1.85	4080	4847	5550
Increase in efficiency of 850 lamp when considering a full field of view as compared to:		*735*	**26%**	**39%**	**48%**
		835	**11%**	**20%**	**27%**

This method is not yet recognized by IESNA

© Brian Liebel, 2003

Common Wattage Reductions

- 60% common when replacing T12s and magnetic ballasts
- 30% common when replacing 730 or 735 T8s and generic electronic ballasts
- 20% common when replacing 830, 835 or 741 T8s and generic electronic ballasts

© Brian Liebel, 2003

Status of Scotopically Enhanced Lighting

Concerns by the Lighting Community:

The barriers to implementing this method have been:

- **A belief that lighting with more scotopic content will be unacceptable to building occupants.**
- **A belief that the visual benefits derived from the increase in visual acuity is negligible in normal working environments.**
- **The concern that the design method has not been formally tested for accuracy or reliability in real working environments.**
- **A concern that there are no recognized institutions or agencies that sanction the design method, making it a potential liability to design practitioners.**

© Brian Liebel, 2003

Current Research

<u>DOE, Individual acceptance/preference:</u>

This project tests individual preferences of light levels between 835 and 850 lamps. After choosing individual lighting levels, subjects are allowed to compare sources and choose the lamp they want to keep.

- **Objectives: Demonstrate energy savings based on user defined lighting levels and user acceptance and/or preference of Scotopically Enhanced Lighting.**
- **Results: Not enough data. Study is in the Pilot Phase. In exploratory study, 2 subjects selected the scotopically enhanced lamp as their preference.**

© Brian Liebel, 2003

Current Research

<u>PG&E Projects</u>:

Over 300,000 sq. ft. of PG&E office spaces have been retrofit with Enhanced Fluorescent Lighting.

- **Objectives: Determine light levels and user acceptance of 850 lamps in normal working environments.**
- **Results:**
  - **All buildings have high level of user satisfaction.**
  - **Energy savings range from 30-65%, depending on existing lamp/ballast technologies.**
  - **Most recent applications with Indirect/Direct distribution yield .56 Watts/sq. ft. in open offices with low partitions and high computer use.**
  - **PG&E now uses the 850 lamp as their standard for retrofit and new construction in their buildings.**

© Brian Liebel, 2003

Current Research

<u>DOE / PG&E Project</u>:

- **Determine whether or not occupants working under normal conditions will accept lighting with more scotopic content.**
- **Determine whether or not the mathematical models proposed provide accurate predictors for energy savings while achieving user acceptance.**
- **Determine whether or not the light levels chosen by individuals, if given a choice, would be lower with Scotopically Enhanced Lighting.**

© Brian Liebel, 2003

Office Building Research Project

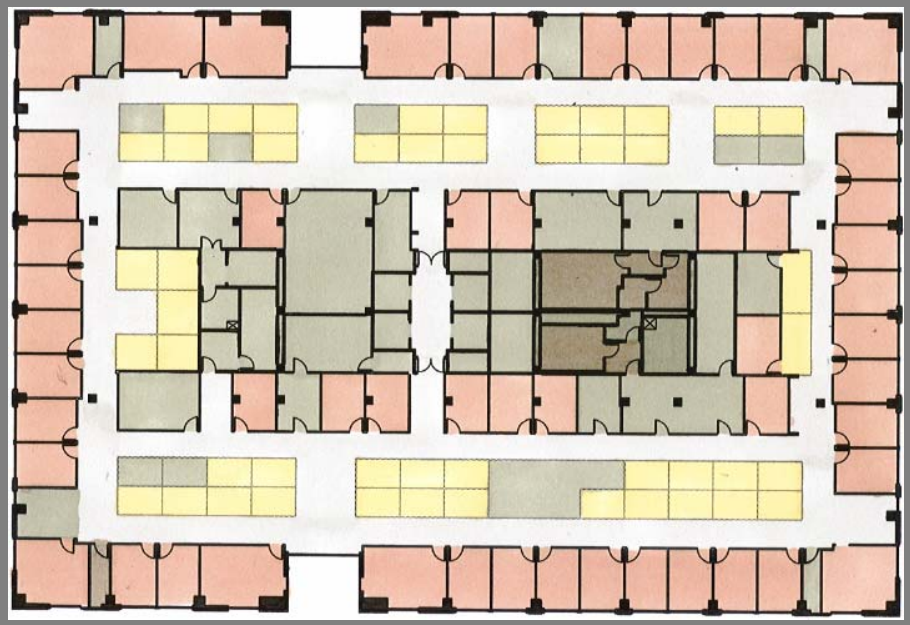

10th Floor

Open Offices:	**47**
Private Offices:	**55**

11th Floor

Open Offices:	**55**
Private Offices:	**48**

© Brian Liebel, 2003

Floor Plans – Lighting Settings

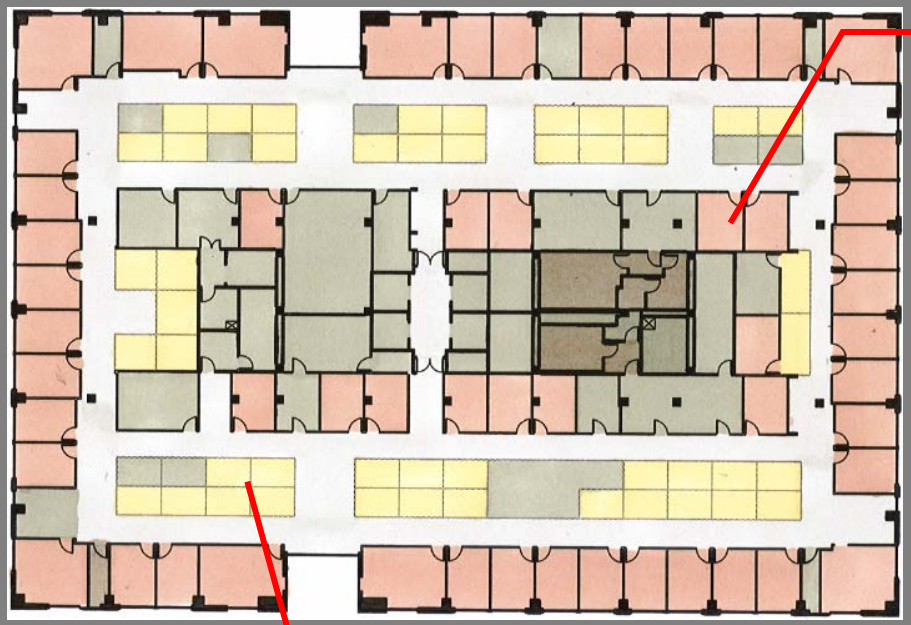

<u>Private Offices</u>:

- **Set for 20 % light level reduction between floors**
- **Users have control over their lights through their desktop computers**

<u>Open Offices</u>:

- **Set for 20 % light level reduction**
- **Users have no control over lights**

© Brian Liebel, 2003

Research Protocol

11th Floor: **Open Offices: 35 Avg Horizontal fc. (IES rec)**

835 lamps **Private Offices: Set at 66% of existing**

Open Offices: Lighting levels set, no individual control
Private Offices: Have individual control of lighting levels
ALL OFFICES: Surveyed about satisfaction with lighting
ALL OFFICES: Monitored for Energy consumption

10th Floor:

850 lamps

Open Offices: 28 Avg Horizontal fc.
(Visually Effective equivalent to IES rec.)

Private Offices: Set at 53% of existing
(Visually Effective equivalent to IES rec.)

© Brian Liebel, 2003

Research Protocol

11th Floor: **Open Offices: 35 Ave Horizontal fc. (IES rec)**

835 lamps **Private Offices: Set at 66% of existing**

Question:

What is difference in light level between the two floors?

Question:

Is there a significant difference in occupant satisfaction between the two floors?

10th Floor:

850 lamps

Open Offices: 28 Ave Horizontal fc.
(Visually Effective equivalent to IES rec.)

Private Offices: Set at 53% of existing
(Visually Effective equivalent to IES rec.)

© Brian Liebel, 2003

Open Office Areas

Measured light levels:

10th Floor:

Average 28 fc

11th Floor:

Average 36.5 fc

Difference = 23%

Typical Open Office

© Brian Liebel, 2003

Private Offices

Measured light levels:

<u>10th Floor</u>:

Average 43 fc

<u>11th Floor</u>:

Average 53 fc

Difference =19%

<u>10th Floor</u>

<u>11th Floor</u>

© Brian Liebel, 2003

Measured S/P Ratio

Measured Values of S/P: 835 and 850

Lamp	Initial Lumens (P)	S/P Ratio	Brightness $P(S/P)^{0.5}$	Paper $P(S/P)^{0.78}$	Computer $P(S/P)^{1.0}$
835	3100	1.45	3733	4142	4495
850	3000	1.96	5071	5071	5880
Increase in efficiency of 850 lamp when considering a full field of view			13%	22%	31%

Open Office, Paper Calculations:

835: 36.5 fc. x $(1.45)^{.78}$ = 48.77 Visually Effective fc.

850: 28.0 fc. x $(1.96)^{.78}$ = 47.33 Visually Effective fc.

© Brian Liebel, 2003

Preliminary Findings

11th Floor: **Open Offices: 36.5 Ave Horizontal fc.**

835 lamps **Private Offices: 53 Ave. Horizontal fc.**

What is difference in photopic light level between the two floors?

Answer: ~ 20%

Is there a significant difference in occupant satisfaction between the two floors?

Answer: NO

10th Floor: **Open Offices: 28 Ave Horizontal fc. (Reduction of 23%)**

850 lamps **Private Offices: 43 Ave Horizontal fc. (Reduction of 19%)**

© Brian Liebel, 2003

Preliminary Findings

Online Likert scale Questionnaire with 17 lighting perception questions allowed for accurate counting and analysis.

- **Results showed <u>only 1</u> statistical significant variation, having to do with brightness perception:**

  - **Both Floors *dis*agreed that the lighting was too dim, the 11th floor disagreeing more than the 10th floor (i.e., the 11th floor was perceived as being brighter). *Neither floor was ranked as too dim*.**

There was <u>NO</u> statistical difference in the overall satisfaction ranking between the two floors.

© Brian Liebel, 2003

Opinions from Survey

Sample Comments from the Survey (10th floor Open Area):

"I have to read a lot of fine detail and under the old lighting my eyes used to get tired all the time. This new lighting is much easier to read with."

"I noticed right away that when I am going home at night my eyes no longer hurt from the strain of the work day like they used to do."

"The glare reflecting off my computer screen has been almost eliminated, although there is still some glare from the overhead light shining directly at my eyes (but less than before, when I had to disconnect the overhead light tubes)."

© Brian Liebel, 2003

Preliminary Findings

- **From DOE study and PG&E field experience, the 5000K, 85 CRI lamps can be used in offices spaces with reduced energy costs while having the same level of user satisfaction as it would if it were lamped with a 3500K, 85 CRI lamp.**
- **The mathematical models developed in the previous research seems to be reliable indicators for visual preference and acceptance.**
- **Caution MUST be taken in how the method is implemented, especially in parabolic fixtures where the lamp is seen as a bare bulb.**
- **The system may be optimized when used in conjunction with indirect lighting.**

© Brian Liebel, 2003

Parabolic Fixtures

- Consider an Existing Installation:
  - Office space with 18 cell parabolic 2x4's
  - How do you retrofit with Scotopically Enhanced Lighting?

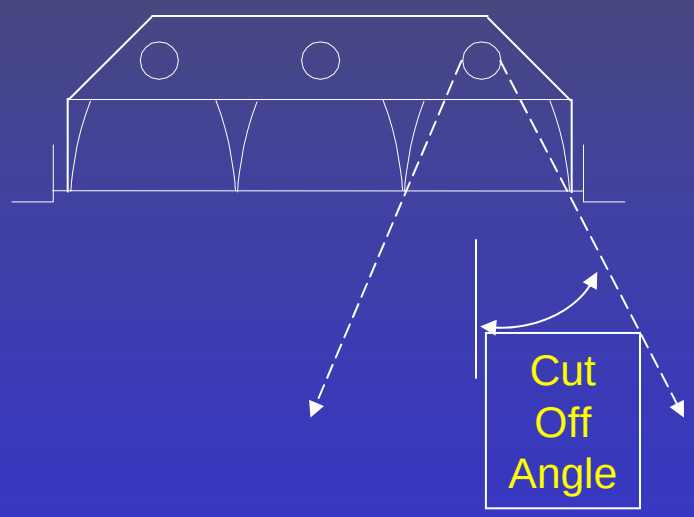

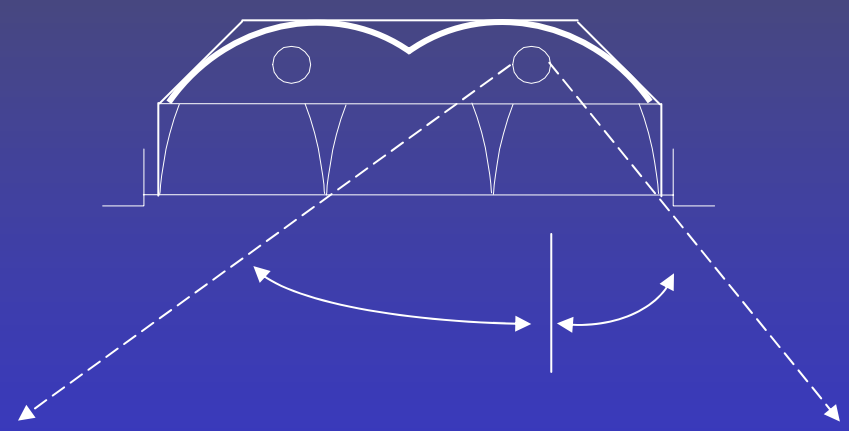

Parabolics are designed to eliminate glare

Cannot retrofit with 2-lamps: changes distribution and adds direct glare!

© Brian Liebel, 2003

Parabolic Fixtures

Dimming lamps reduce bulb wall brightness: this in turn reduces overhead glare from fixtures

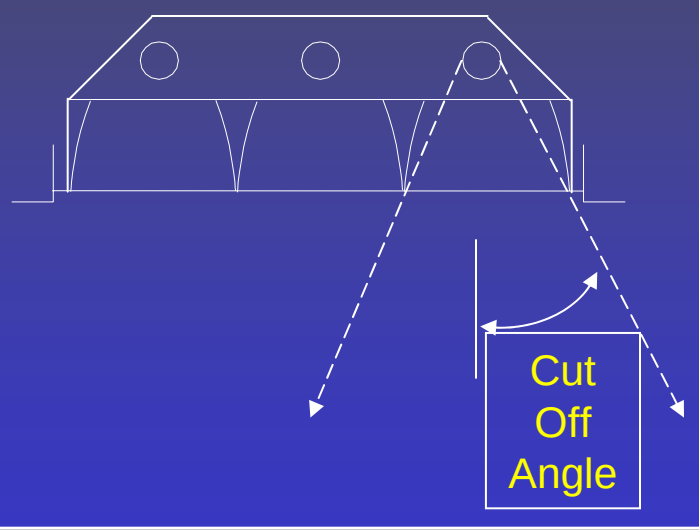

Cutoff angles maintained to reduce direct lamp image: Overall, lighting levels are balanced

- Parabolic fixtures are best retrofitted with dimming ballasts or very low-output fixed ballasts.
- Dimming ballasts allow for more versatile installations and load shedding.

© Brian Liebel, 2003

Suspended Indirect/Direct

- The use of pendant-hung, indirect or direct/indirect luminaires can provide additional benefits of visual comfort.
- The ceiling height, lamp technology, and distribution (% up/down) of light from the pendant are all factors in the overall efficiency of the system.

© Brian Liebel, 2003

Real World Environment

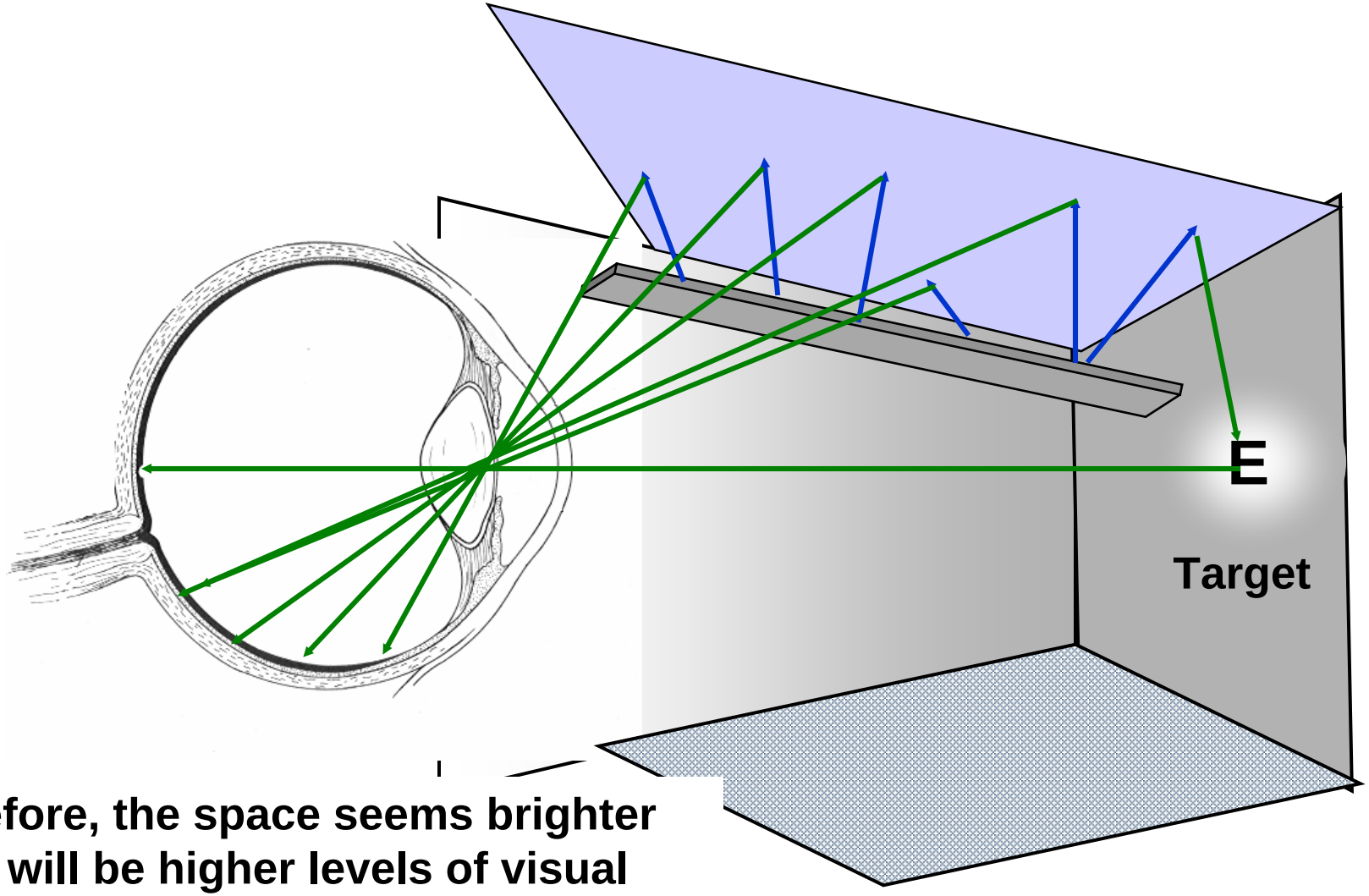

And therefore, the space seems brighter and there will be higher levels of visual acuity!

© Brian Liebel, 2003

Comparisons

Downlight (aka Direct)

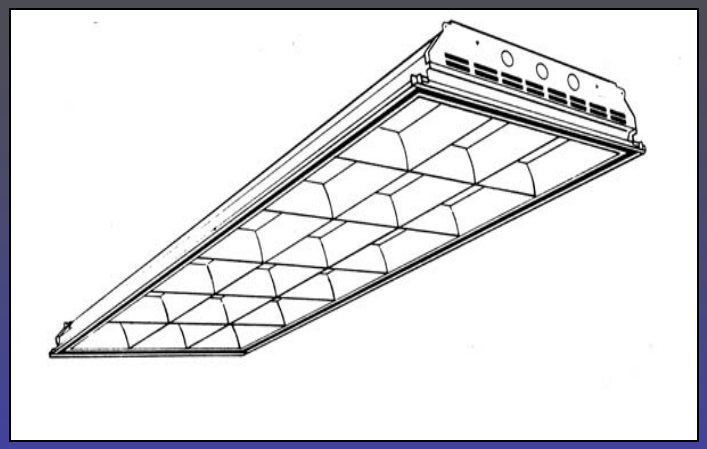

Luminaire Luminance

Bare Lamp of 6000->25,000 cd/m²

Efficiency: 65 to 70%

Uplight (aka Indirect)

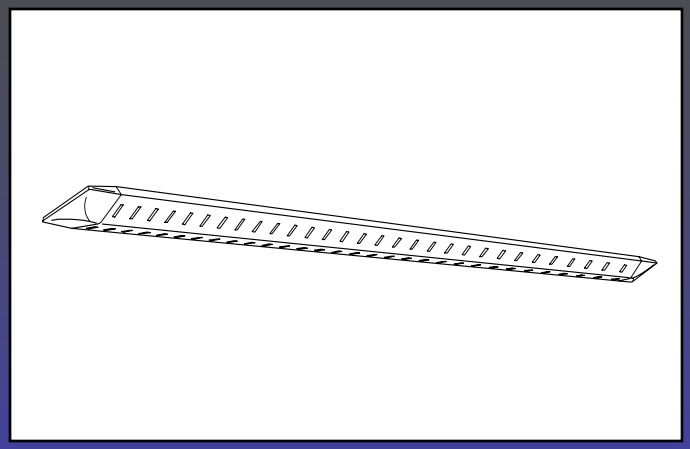

Ceiling Luminance

Ceiling : 450 cd/m²

Efficiency: 80%

© Brian Liebel, 2003

Downlight vs. Uplight

Note that lighting measurements are taken as horizontal Photopic lumens on the desk

© Brian Liebel, 2003

Downlight vs. Uplight

While visually, the space has more surfaces illuminated

© Brian Liebel, 2003

Retrofit with Indirect/Direct Lighting

Before:

Spotty lighting distribution due to occupants pulling out lamps.

Ceiling is dark.

People HATED the lighting

© Brian Liebel, 2003

Retrofit with Indirect/Direct Lighting

Transition:

Compare ceiling uniformity and brightness.

Lighting on tasks are, on average, equal.

People respond positively, look forward to entire renovation.

© Brian Liebel, 2003

Retrofit with Indirect/Direct Lighting

Completion:

Uniform ceiling, and much more pleasant atmosphere.

Lighting more uniform on tasks and vertical surfaces.

Employee attitude is greatly improved.

© Brian Liebel, 2003

Retrofit with Indirect/Direct Lighting

Completion:

Lighting Power Density:

.56 W/sq. ft.!

© Brian Liebel, 2003

Educate End Customer and End User

- Scotopically enhanced lighting is different from what most people are used to.
- Very important to inform the people that will be working under the new lighting in order to reduce complaints – in any facility, there are a number of people who believe that *any* change is bad.
- There is generally a 3-week adaptation period after the initial installation.

© Brian Liebel, 2003

Summary

- Scotopically Enhanced Lighting is a design method that takes into account the visual response of the eye due to different color characteristics of light sources.
- Lamps with more blue in the spectrum provide enhanced brightness perception and improved visual acuity.
- There are significant energy savings to be gained through the use of this method.

© Brian Liebel, 2003

Summary

Caveats:

- The method is not sanctioned by the IES or any other authority at this time; therefore client approval is critical.
- Higher energy savings can be gained using higher S/P ratio lamps, however, user acceptance has not been tested.
- It is important to consider the direct lamp image and to minimize glare when using this method to ensure user satisfaction.

© Brian Liebel, 2003

Scotopically Enhanced Lighting

Brian Liebel, PE, LC

Principal, AfterImage + Space

510.450.1155

brian@aispace.com

© Brian Liebel, 2003